PEWOREP ø 172-1370 mm / PN16 (EPDM) | 0172 / 198 mm | 140 mm

Product number 138-2R10A4E172-198

Pressure levels	PN 16
High tension-proof / Not tension-proof	Not tension-proof
Diameter range	> 172 mm
Pipe materials	All pipe materials
Housing material	Closure, Housing Material A4 (1.4571 / 1.4404)
Flowing medium	Drinking water / wastewater / air / compressed air (oil-free) / solids -30 °C up to 125 °C EPDM HT (peroxyd)

Application temperature: -30°C bis +80°C
Maximum diameter difference: bis 3 mm

PEWOREP PN 16 NOT TENSION-PROOF with EPDM Sealing -30°C up to +80°C in A4 (316/1.4571) Quality Ø min./max. 172-198 mm Width 138 mm 2 Closure / Country of origin: NL TARIC: 73072980 weigth: 6 kg

OD Ø min. / max.	172 / 198 mm
B	138 mm
Cmax	40 mm
d	236 mm
H	262 mm
M	M12
Weight	6 kg

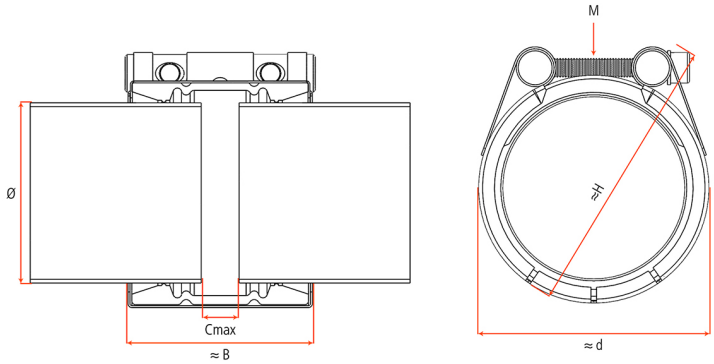

Important information:

- Follow the installation and disassembly instructions.
- PN = Working pressure with consideration of the application loads for industrial applications. In case of shipbuilding applications, PN is one PN class below, e.g. PN 25 Industry = PN 16 Shipbuilding.
- PN classes = PN 2.5; PN 6; PN 10; PN 16; PN 25
- Test pressure = PN x 1.5
- The pressure data is given under the precondition that radially rigid steel pipes with a minimum wall thickness are used under static load.
- Use the Technical Manual for other pipe materials.
- Band inserts are necessary for special applications.
- Support sleeves must be used for thermoplastic plastic pipes (PE/PP/PB/PVC/ABS...).