PEWOCOMBIGRIP ø 312-640 mm / PN6 (EPDM)

Order number: 140-CG6A4E312-325

Diameter range:	> 172 mm
Pipe materials:	Metal pipes - Plastic pipes
Flowing medium:	Drinking water / wastewater / air / compressed air (oil-free) / solids -30 °C up to 125 °C EPDM HT (peroxyd)
Pressure levels:	PN 6
High tension-proof / Not tension-proof:	High tension-proof

Application temperature: -30°C bis +80°C
Maximum diameter difference: bis 3 mm

Tender text:
PEWOCOMBIGRIP PN 6 TENSION-PROOF with EPDM Sealing -30°C up to +80°C in A4 (316/1.4571) Quality Ø min./max. 312-325 mm Width 140 mm 1 Closure Country of origin: NL TARIC: 73072980 weigth: 8 kg

OD Ø min. / max.	312 / 325 mm
≈ B	140 mm
Cmax	40 mm
≈ d	363 mm
≈ H	389 mm
M	M16
Gewicht	8 kg
≈ Volumen	28 dm^3

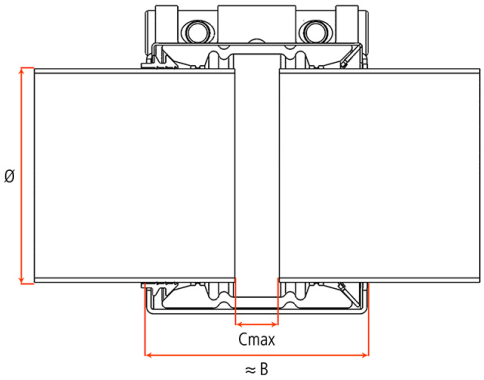

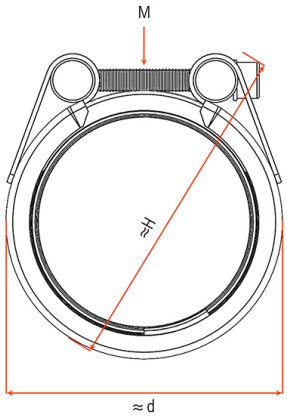

Important information:

- Follow the installation and disassembly instructions.
- PN = Working pressure with consideration of the application loads for industrial applications. In case of shipbuilding applications, PN is one PN class below, e.g. PN 25 Industry = PN 16 Shipbuilding.
- PN classes = PN 2.5; PN 6; PN 10; PN 16; PN 25
- Test pressure = PN x 1.5
- The pressure data is given under the precondition that radially rigid steel pipes with a minimum wall thickness are used under static load.
- Use the Technical Manual for other pipe materials.
- Band inserts are necessary for special applications.
- Support sleeves must be used for thermoplastic plastic pipes (PE/PP/PB/PVC/ABS...).

PEWOBAR GmbH | Barloer Straße 34 | D-46414 Rhede | Fon: +49 (0) 2872 3075930 | www.pewobar.de
Geschäftsführer: Dipl.-Ing. Wolfgang Barbett | Amtsgericht Coesfeld HRB 9285 | Ust.ID Nr.: De 237757754 | eMail: wb@pewobar.de
Bankverbindung: Volksbank Rhede | Konto: 53063400 | BLZ 428 618 14 | IBAN: DE 60 428 618 140 053 063 400 | BIC: GENODEM1RHD